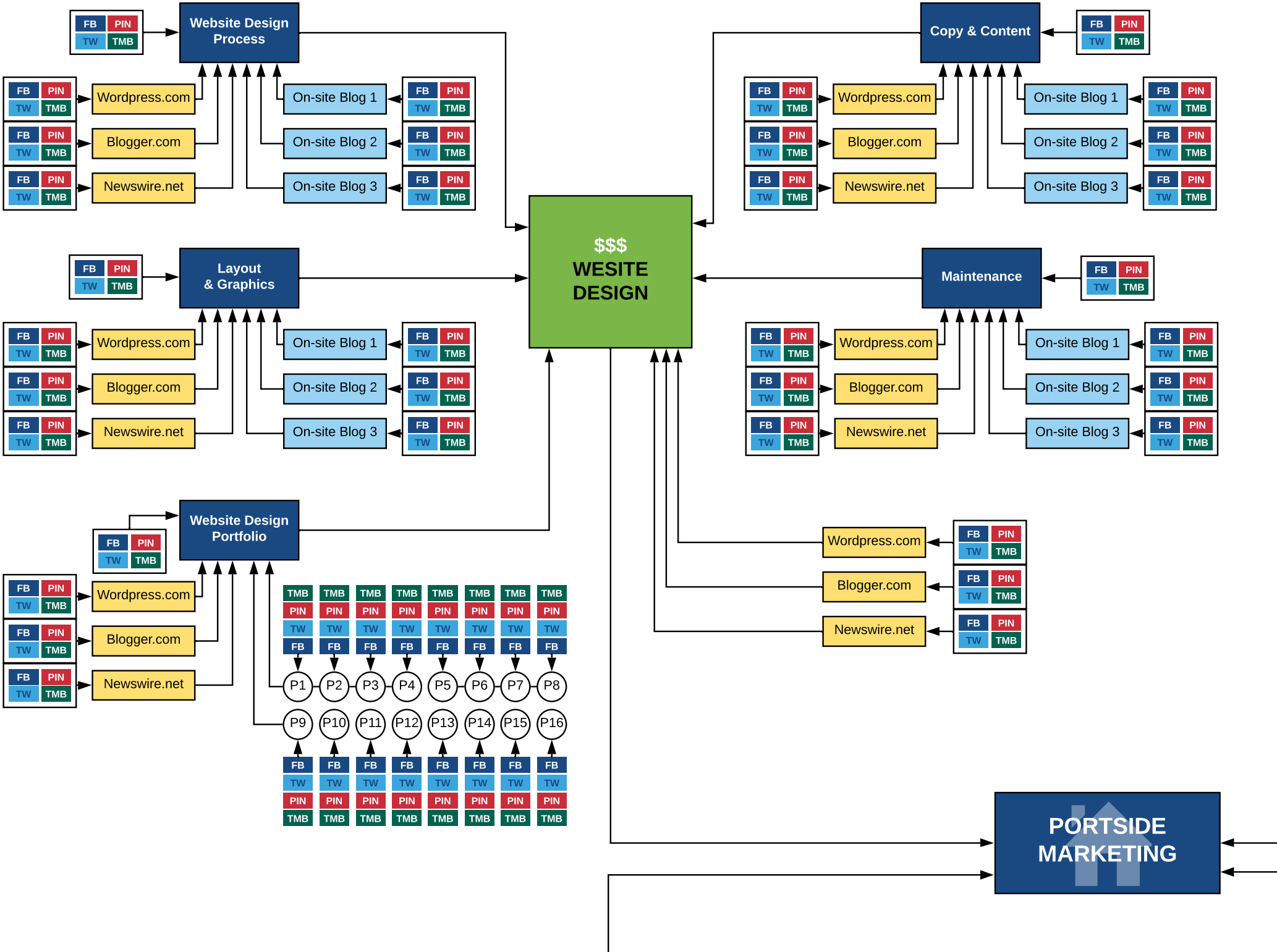
Website Design Process
Copy & Content
$$$
WESITE DESIGN
Layout & Graphics
Maintenance
Website Design Portfolio
Wordpress.com
Blogger.com
Newswire.net
On-site Blog 1
On-site Blog 2
On-site Blog 3
FB
PIN
TW
TMB
P1
P2
P3
P4
P5
P6
P7
P8
P9
P10
P11
P12
P13
P14
P15
P16
PORTSIDE MARKETING

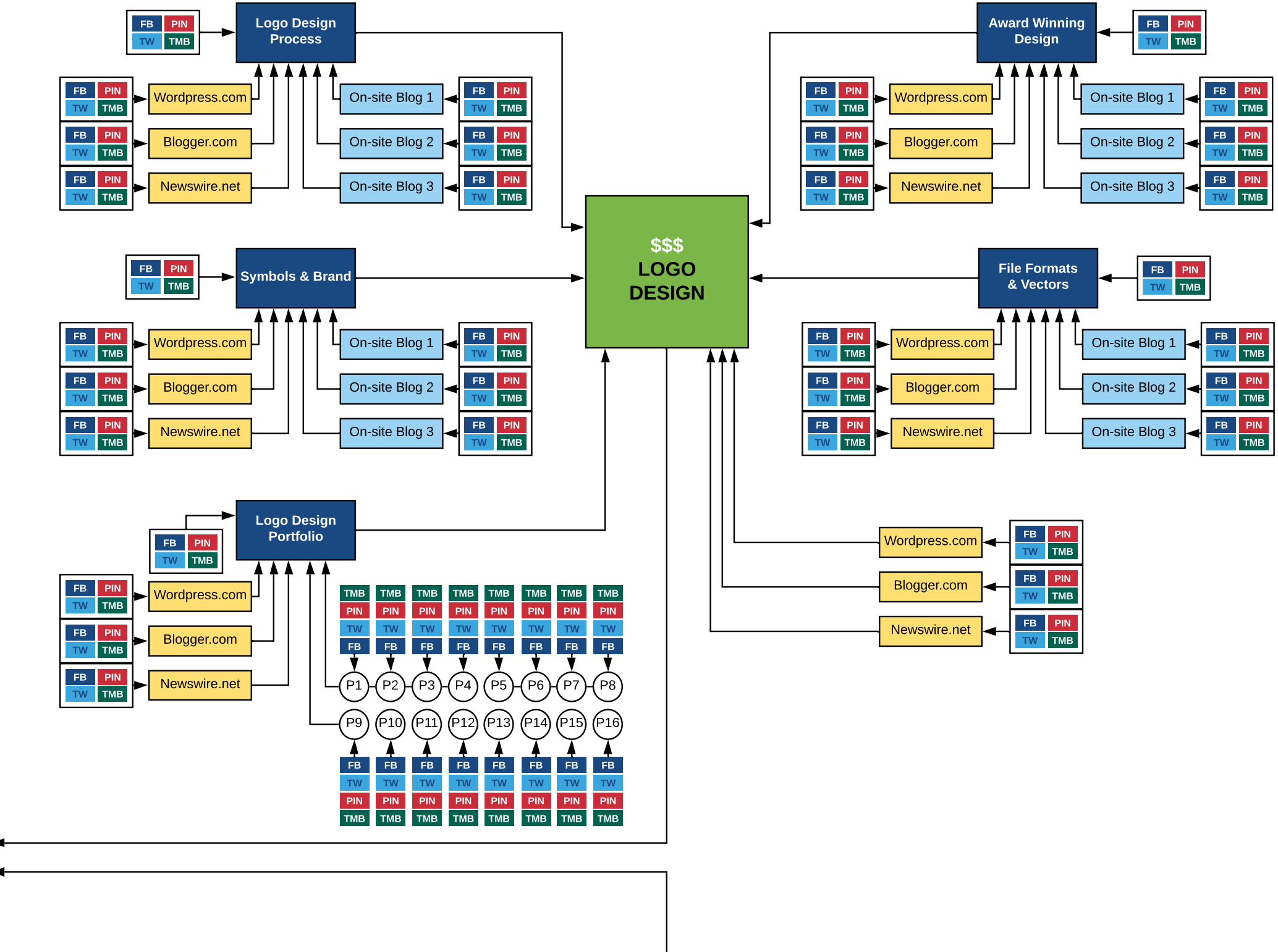
$$$
LOGO
DESIGN
Logo Design Process
Wordpress.com
Blogger.com
Newswire.net
On-site Blog 1
On-site Blog 2
On-site Blog 3
Award Winning Design
Wordpress.com
Blogger.com
Newswire.net
On-site Blog 1
On-site Blog 2
On-site Blog 3
Symbols & Brand
Wordpress.com
Blogger.com
Newswire.net
On-site Blog 1
On-site Blog 2
On-site Blog 3
File Formats & Vectors
Wordpress.com
Blogger.com
Newswire.net
On-site Blog 1
On-site Blog 2
On-site Blog 3
Logo Design Portfolio
Wordpress.com
Blogger.com
Newswire.net
P1 P2 P3 P4 P5 P6 P7 P8
P9 P10 P11 P12 P13 P14 P15 P16
Wordpress.com
Blogger.com
Newswire.net
FB PIN TW TMB

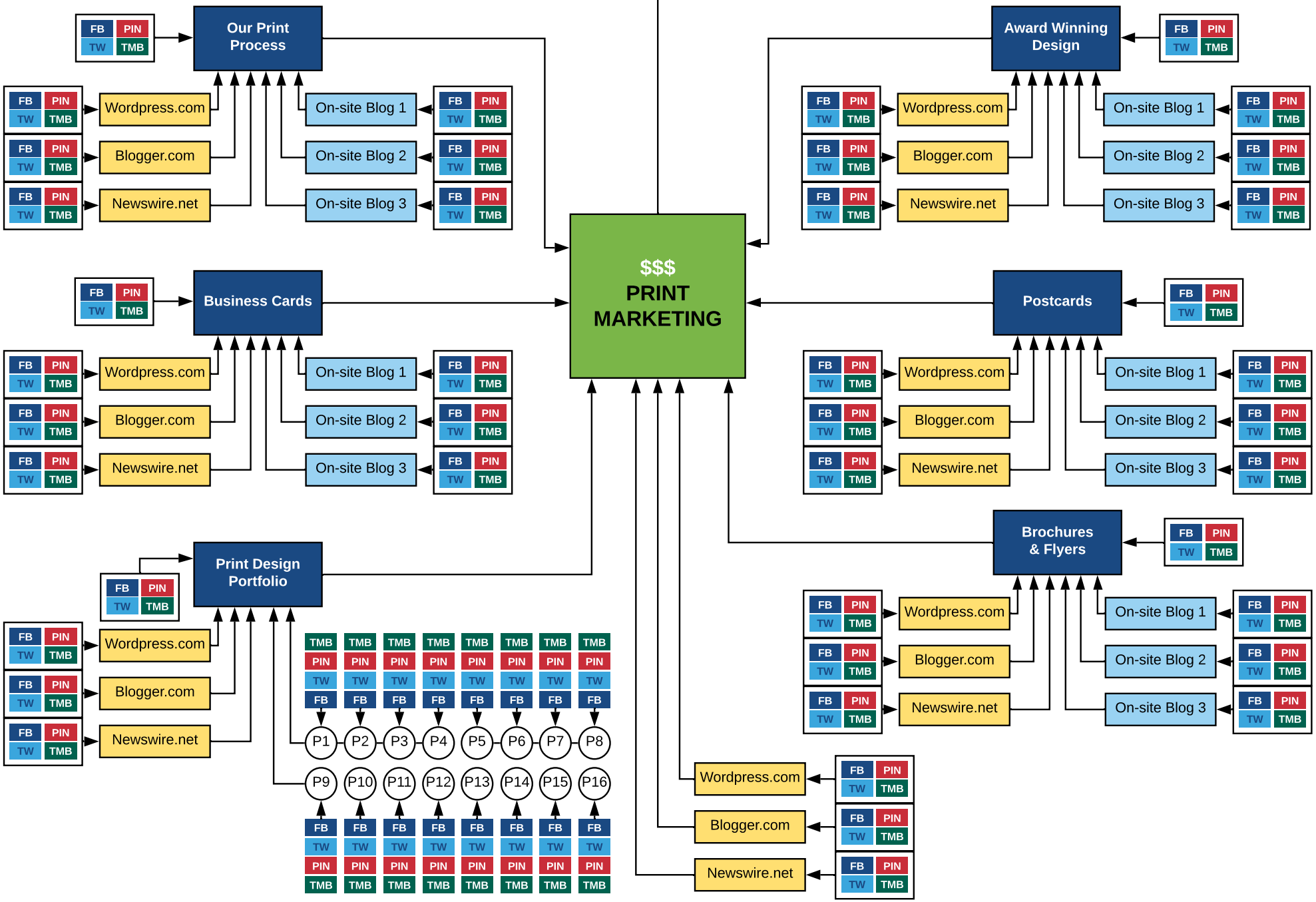
$$$
PRINT MARKETING
Our Print Process
Award Winning Design
Business Cards
Postcards
Brochures & Flyers
Print Design Portfolio
Wordpress.com
Blogger.com
Newswire.net
On-site Blog 1
On-site Blog 2
On-site Blog 3
FB
PIN
TW
TMB
P1
P2
P3
P4
P5
P6
P7
P8
P9
P10
P11
P12
P13
P14
P15
P16

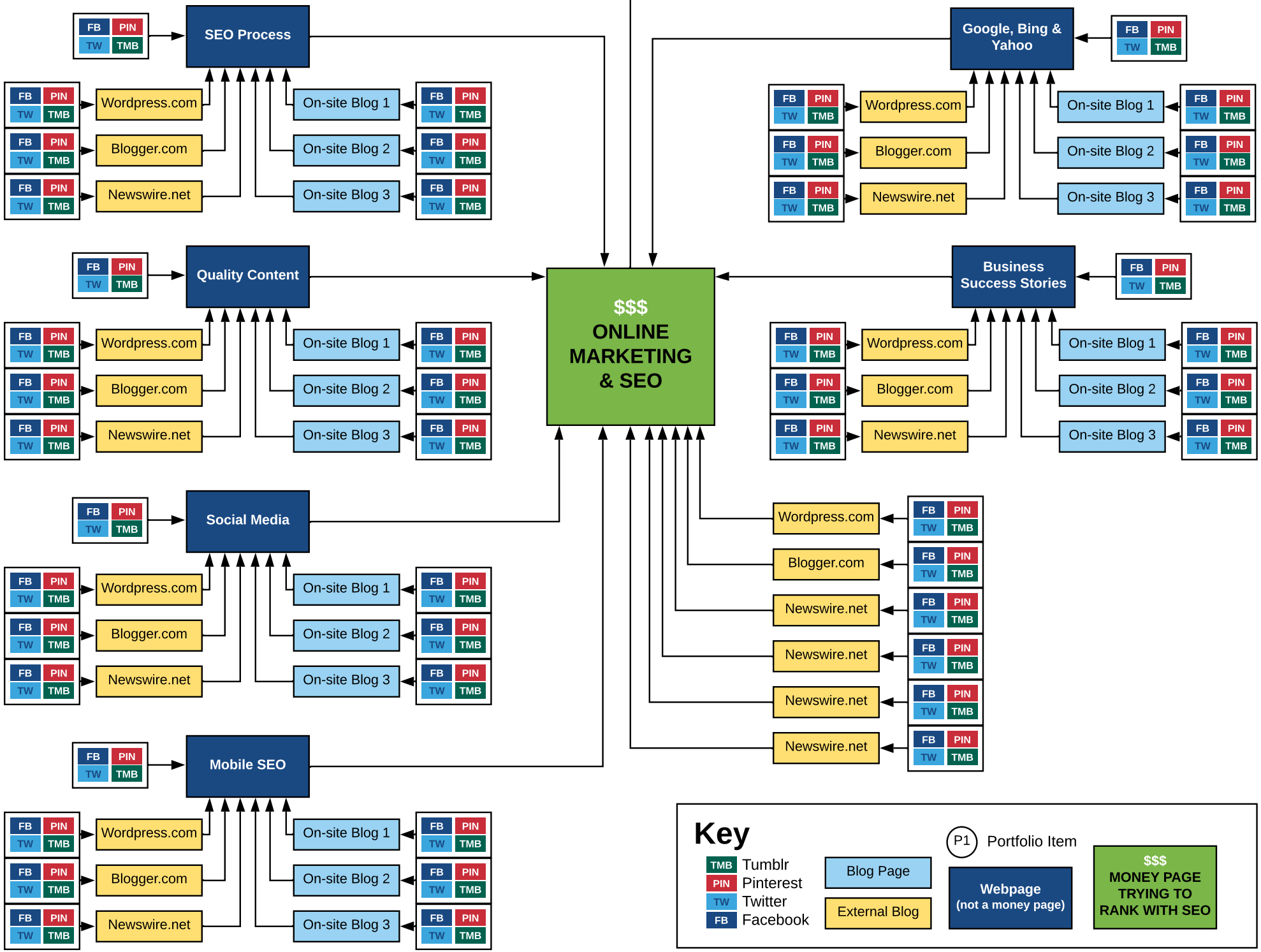
$$$
ONLINE MARKETING & SEO
SEO Process
Quality Content
Social Media
Mobile SEO
Google, Bing & Yahoo
Business Success Stories
Wordpress.com
Blogger.com
Newswire.net
On-site Blog 1
On-site Blog 2
On-site Blog 3
FB
PIN
TW
TMB
Key
Tumblr
Pinterest
Twitter
Facebook
Blog Page
External Blog
P1
Portfolio Item
Webpage
(not a money page)
$$$
MONEY PAGE TRYING TO RANK WITH SEO